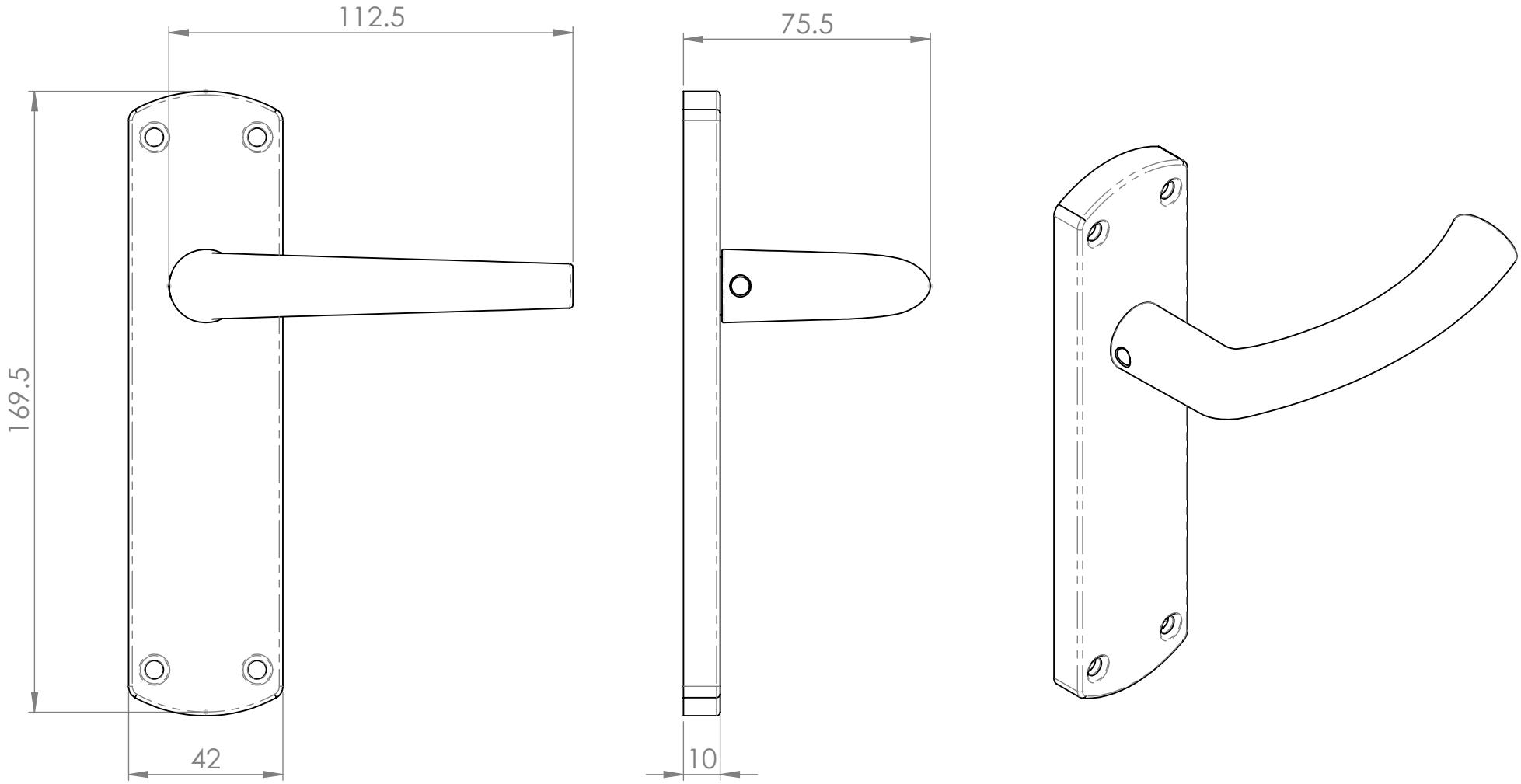
112.5
75.5
169.5
42
10